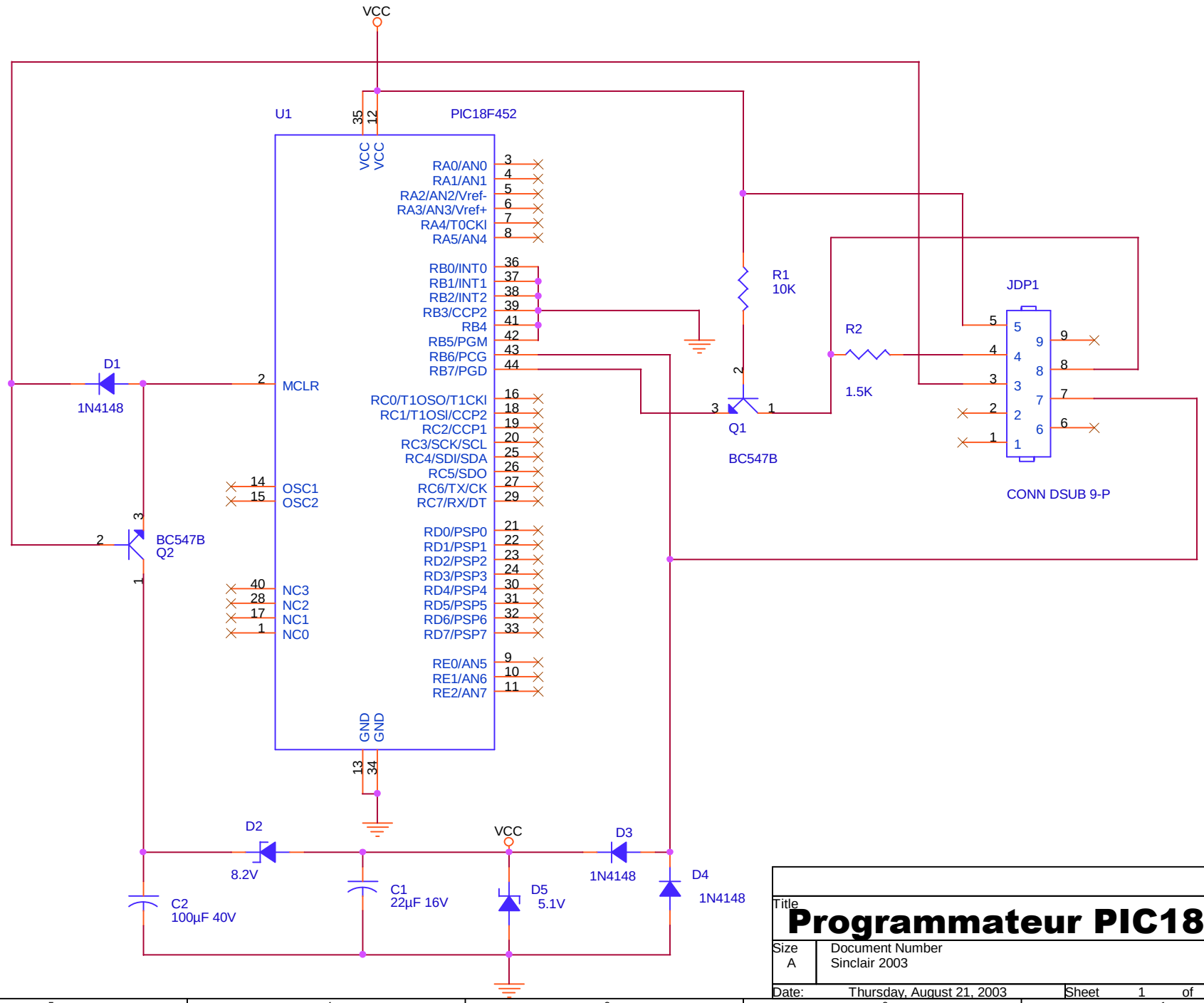

Title

Programmateur PIC18F452

Size	Document Number	Rev
A	Sinclair 2003	

Date: Thursday, August 21, 2003 Sheet 1 of 1